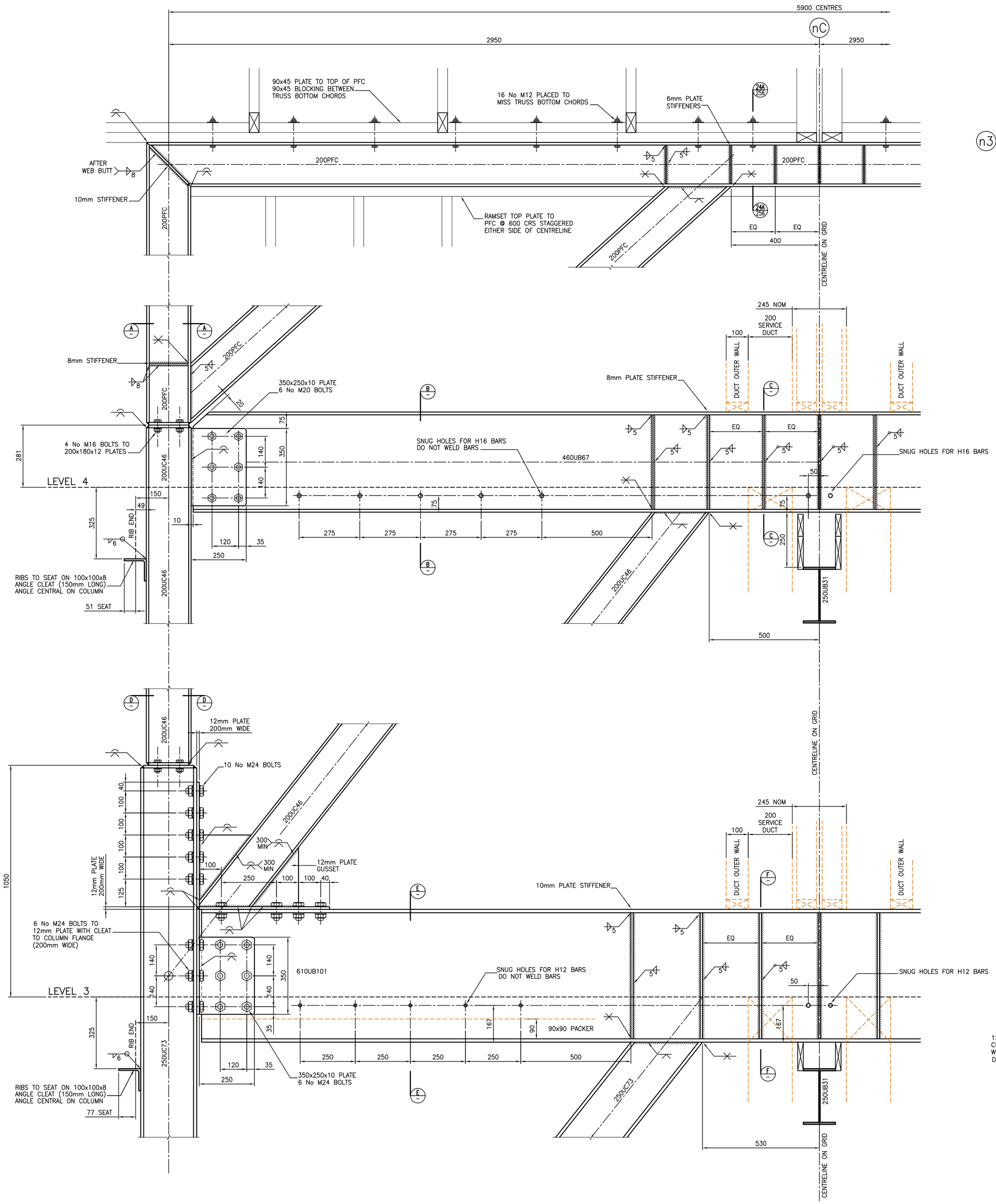

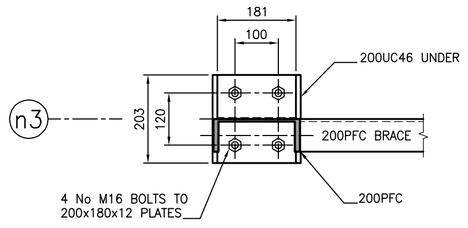

SECTION A
SCALE 1:10

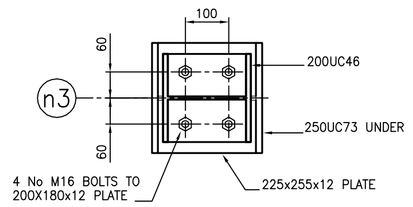

SECTION D
SCALE 1:10

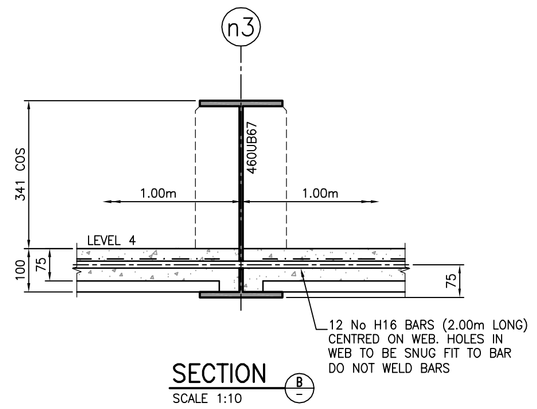

SECTION B
SCALE 1:10

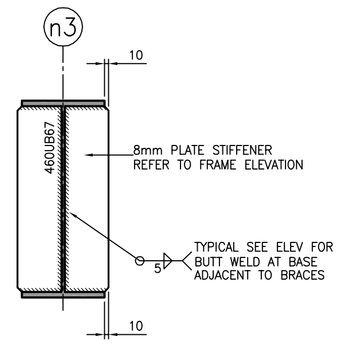

SECTION C
SCALE 1:10

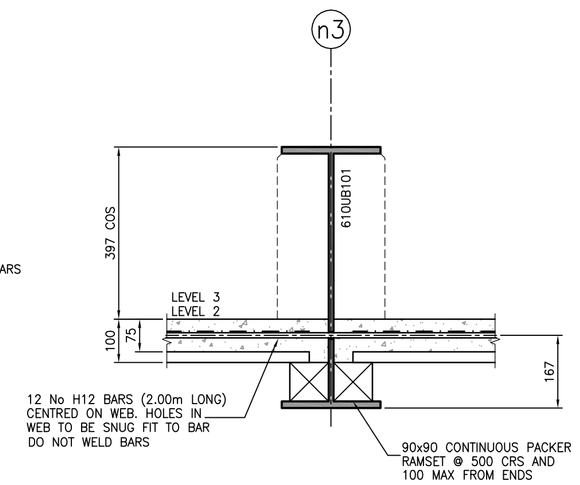

SECTION E
SCALE 1:10

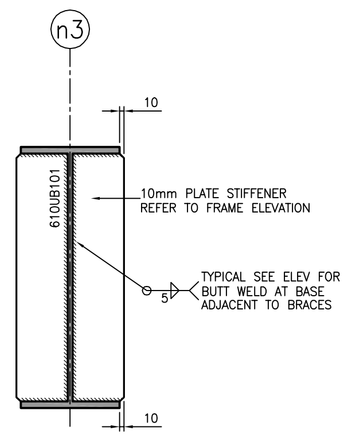

SECTION F
SCALE 1:10