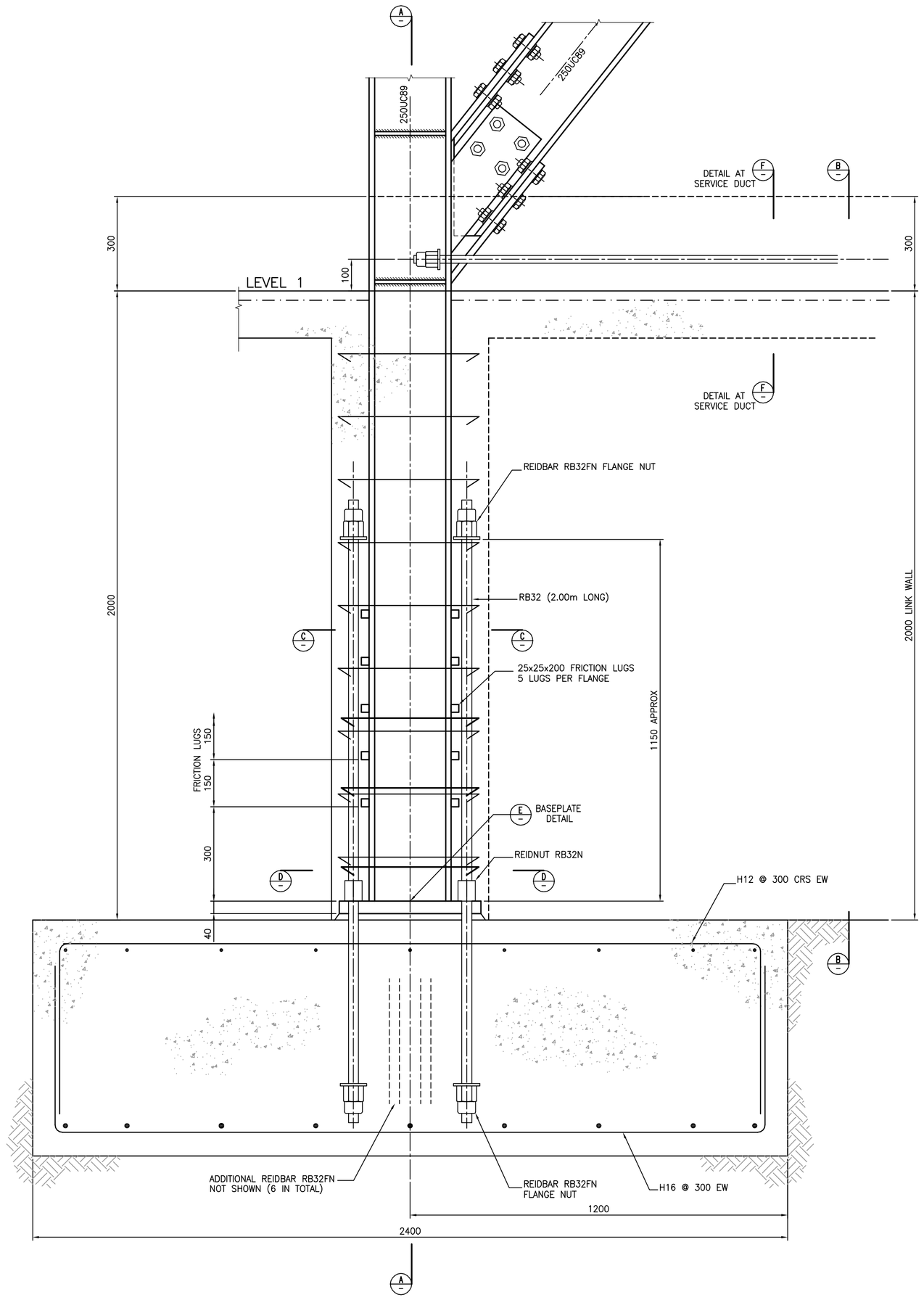

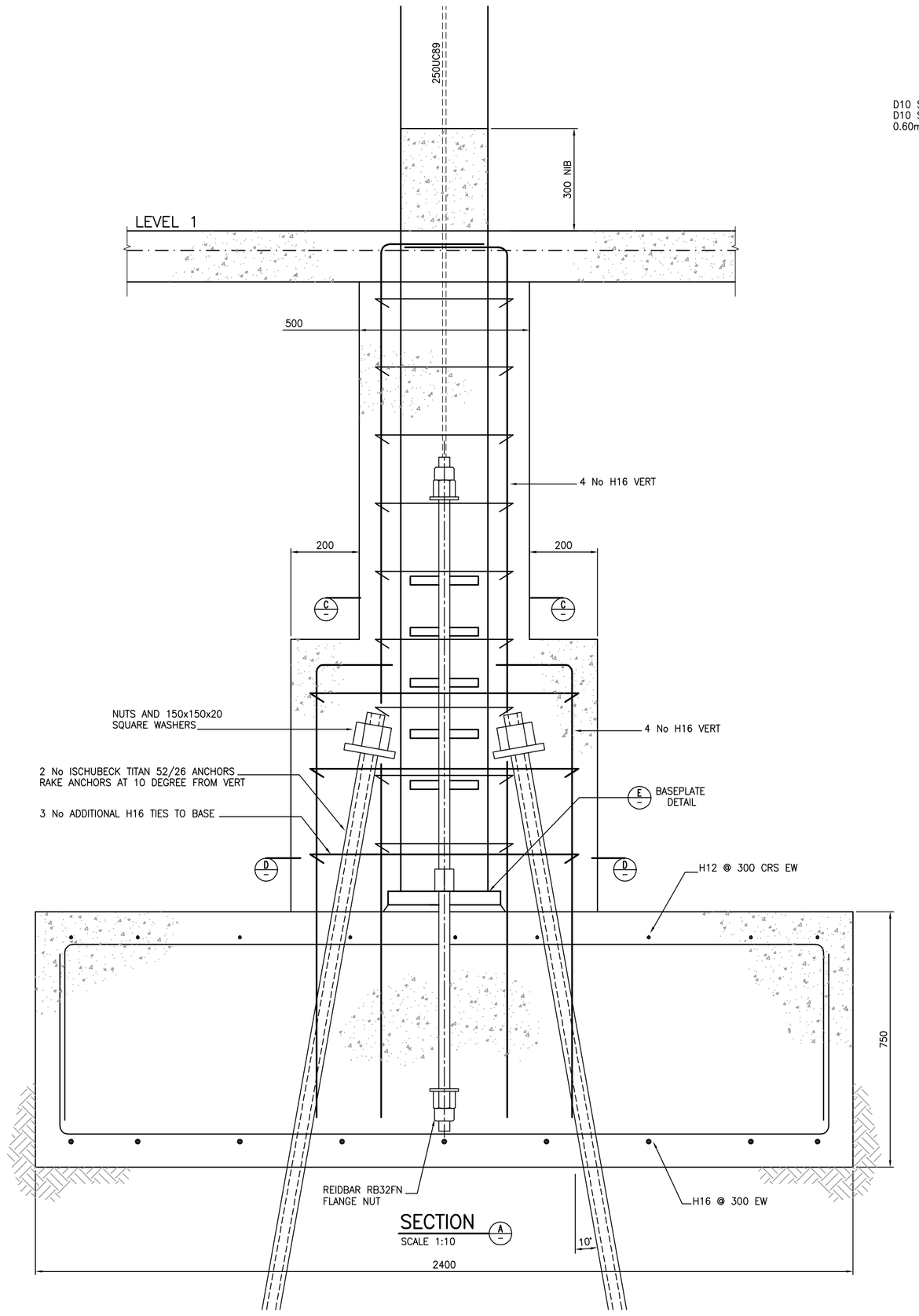

SECTION A
SCALE 1:10

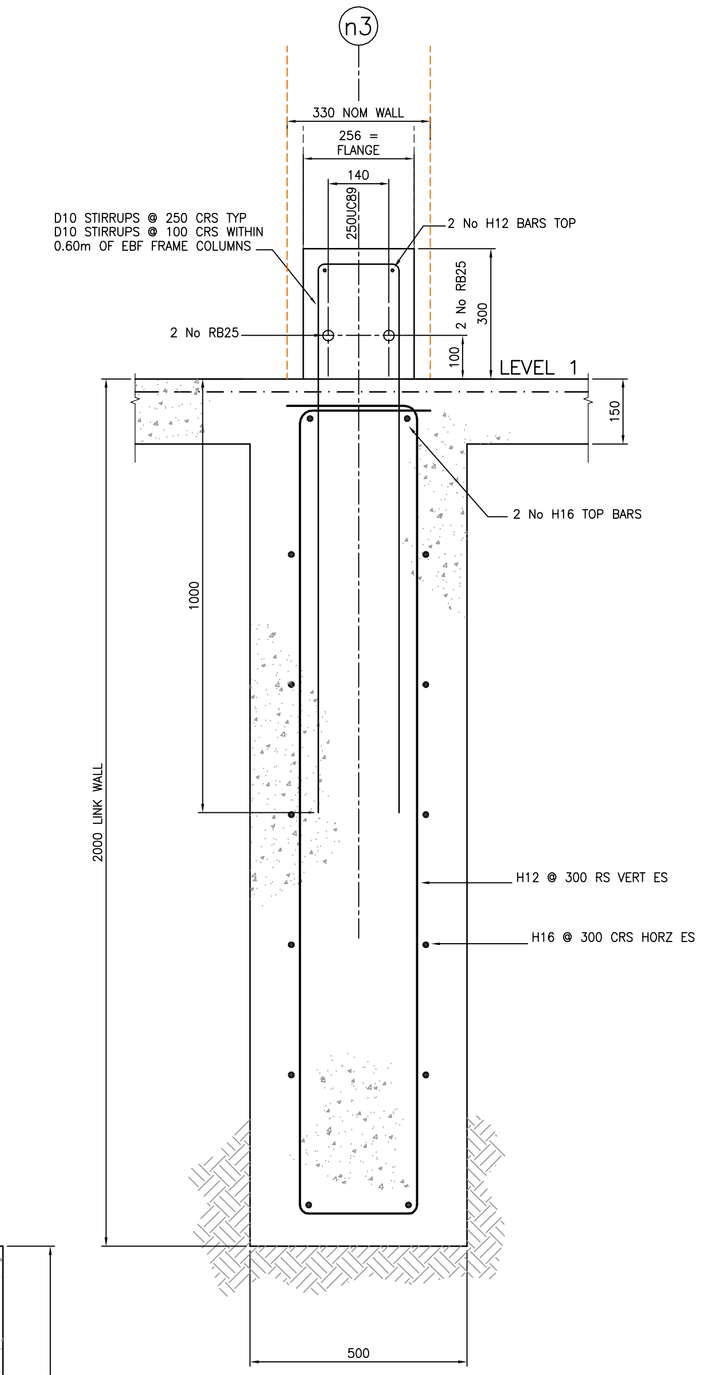

SECTION B
SCALE 1:10
LINK FOOTING

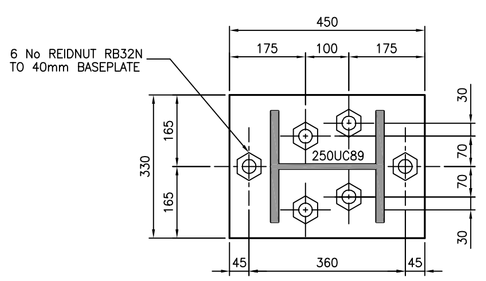

PLAN E
SCALE 1:10
BASEPLATE DETAIL

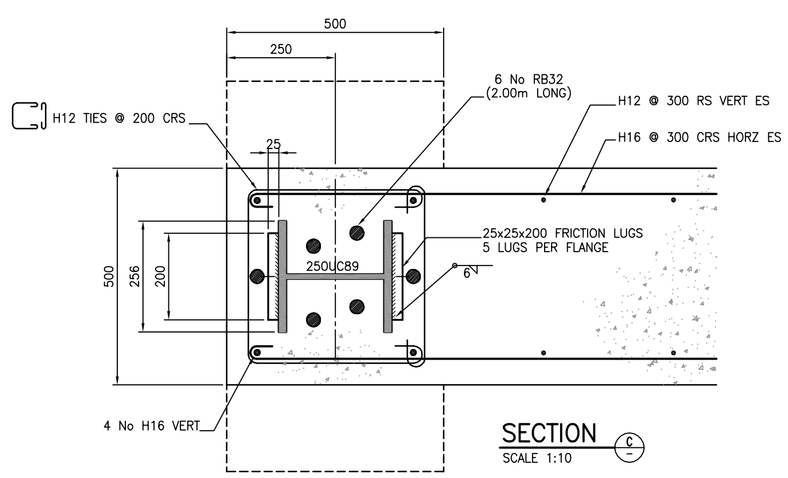

SECTION C
SCALE 1:10

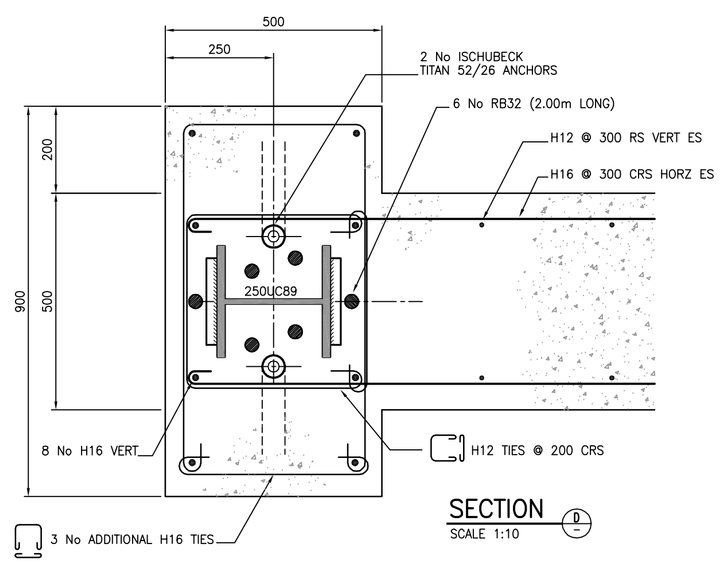

SECTION D
SCALE 1:10